stylus

CADET – HANDSHOWER ON RAIL

WATER EFFICIENT TAPWARE

(NOMINAL FLOW RATE = 8 L/min)

PLUMBERS INSTALLATION INSTRUCTIONS

Important

* **Wall elbow (4) is fitted with a 9 L/min flow regulated check valve.**
  Note: Warranty is void if check valve (5) & flow regulated check valve (6) are not installed as shown.
* **Not suitable for gravity feed systems.**
* **All pipework must be thoroughly flushed prior to installation, as foreign materials may block the flow regulating device and reduce the flow of water.**
* **SHOWER RAIL(14) MUST NOT BE USED AS A GRAB RAIL.**
* **Drilled holes for attachment of shower rail must be vertical and the distance between them must be accurate to ensure correct fit when rail (14) is installed.**
* **To prevent drill from wandering on tiled surface it is recommended that masking tape be applied prior to drilling the tiled surface. Mark out the hole centres ensuring the centres are vertical.**

Installation

1) Check that threaded nipple (1) is the correct length as shown. Cut to length if required ensuring end face is square. Apply thread tape to the thread.
   Important : Care must be taken that thread tape cannot become dislodged and block the flow regulating device, causing a reduction in water flow.
2) Fit 'O' ring (2) into groove in base of cover plate (3). Screw wall elbow (4) together with cover plate (3) onto threaded nipple (1) and position so that hose (13) will hang vertically down. DO NOT OVERTIGHTEN.
3) Determine a position for the shower rail assembly ensuring it is at a suitable height for the user.
4) **SOLID WALLS:-** (Brick, mansory blocks,concrete etc)

i) Drill holes 8.00mm diameter, 50mm deep.
ii) Cut the wings of the wall anchor (19) at the elbow joint (Fig.1) using scissors or a sharp knife.
iii) Squeeze the cut wings of the wall anchor (19) together and insert into the drilled hole, ensuring the back face of the head is flush with the wall surface.

CAVITY WALLS:-(Gyprock/tile, fibre cement sheet/tile)
Note: Total wall thickness must be between 10-16mm.
i) Drill holes 8.00mm diameter.
ii) Squeeze the wings of the wall anchor (19) together and insert into the drilled hole, ensuring the back face of the head is flush with the wall surface.

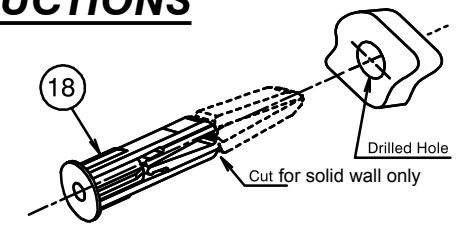

Fig.1

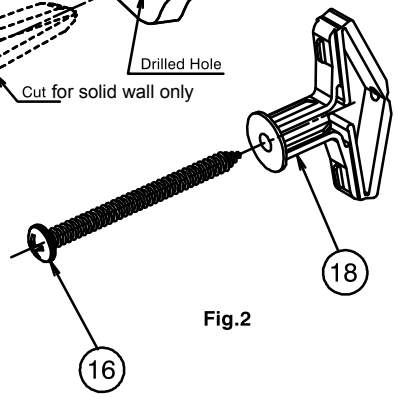

Fig.2

5) Pass the screw (16) through hole in mounting base(17) and assemble into the wall anchor (18) with attaching rail assembly (14) to the wall.
   Note : Check that rail assembly (14) is vertical before tightening screws (16) and cover (15) snaps shut.

6) Ensure that check valve (5), flow regulated check valve (6) and circlip (7) are in position in wall elbow(4). Fit rubber washer (8) into hexagon fitting on shower hose (13), screw onto wall elbow (4) and tighten. Fit rubber washer (10) into plain end fitting (11) on shower hose (13), screw onto shower head (9) and tighten. Fit shower head (9) into shower bracket.
   Important: If water does not flow from shower head (9) make sure that check valves (5 & 6) are installed with the arrows pointing in the direction of flow.
   Note : Height of shower can be adjusted by loosening knob (12) and sliding shower bracket up or down.

IMPORTANT
Pressure & Temperature Requirements.
• Hot and cold water inlet pressures should be equal.
• Inlet pressure range : 150 –1000 kPa New Regulation :–500 kPa maximum operating pressure at any outlet within a building. (Ref. AS/NZS 3500.1–2003, Clause 3.3.4)
• Maximum hot water temperature : 80 C.

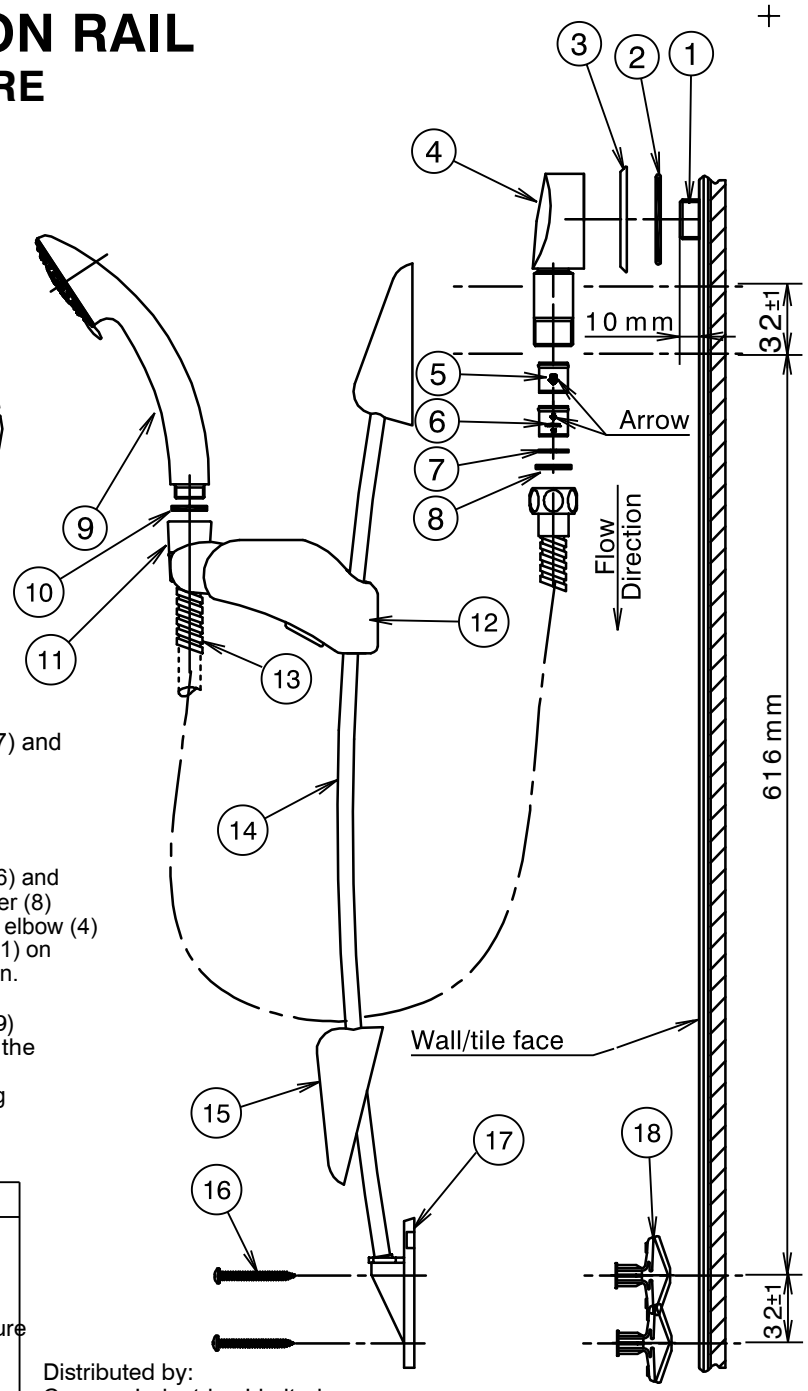

Distributed by:
Caroma Industries Limited
trading as Caroma Dorf
ABN 35 000 189 499

IS8014A(5/10)